WVE26962 NFX

12NC: 850466411130

GTIN (EAN) code: 8003437899058

SENSING THE DIFFERENCE

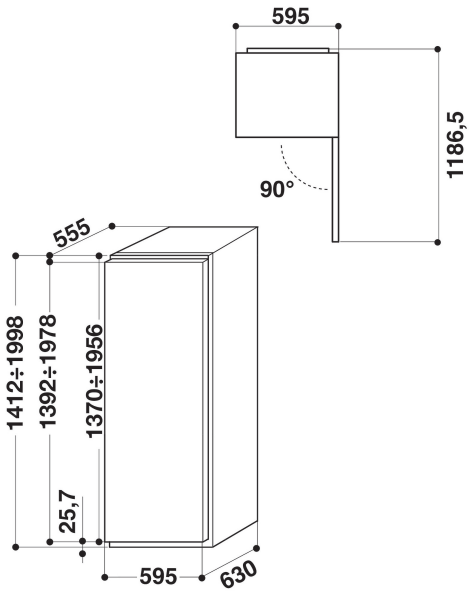

MAIN FEATURES

Product group	Freezer
Commercial code	WVE26962 NFX
GTIN (EAN) code	8003437899058
Construction type	Free-standing
Installation type	N/A
Type of control	Electronic
Main colour of product	Modern Steel
Electrical connection rating (W)	150
Current (A)	10
Voltage (V)	220-240
Frequency (Hz)	50
Length of Electrical Supply Cord (cm)	200
Plug type	Schuko
Total unit net capacity (l)	260
Height of the product	1875
Width of the product	595
Depth of the product	630
Maximum adjustability feet	0
Net weight (kg)	69
Gross weight (kg)	71
Door hinge	-

TECHNICAL FEATURES

Defrost process	Frost-free
Fast freezing function	Yes
Refrigerator section with thaw water drainage system	Yes
Number of drawers/baskets	5
Lockable door	No
Thermometer freezer section	None
Interior light	-

PERFORMANCES

Energy efficiency class - NEW (2010/30/EU)	A++
Freezing capacity (kg/24h) - NEW (2010/30/EU)	24
Temperature rise time (h)	24
Climate class	SN-T (EN153)
Frost free system	Freezer
Freezer Net capacity (l) - NEW (2010/30/EU)	260