TI 60 X

INDESIT

ENGLISH Instructions for use Page 2

INSTRUCTION FOR USE

BEFORE USING THE COOKING HOB

SUGGESTIONS FOR ENVIRONMENT PROTECTION

PRECAUTIONS AND GENERAL ADVICE

ENERGY SAVING TIPS

CARE AND MAINTENANCE

AFTER-SALES SERVICE

INSTALLATION

PRODUCT DESCRIPTION SHEET

BEFORE USING THE COOKING HOB

- To get full satisfaction of your cooking hob, please read these instructions carefully and keep them for future consultation.

- Keep the packaging material (plastic bags, polystyrene parts, etc.) out of the reach of children, as they are potentially dangerous.
- Check whether the cooking hob has been damaged during transport..
- **Ensure that the installation and electrical connections are performed by a qualified technician, following the manufacturer's instructions and in compliance with current local safety regulations..**

SUGGESTIONS FOR ENVIRONMENT PROTECTION

Packing

The packaging material is entirely recyclable, and is marked with therecycling symbol ♲, which identifies it as a type of material that must be sent to local waste-disposal centres.

Domestic appliances

This appliance is marked according to the European Directive 2012/19/EC, Waste Electrical and Electronic Equipment (WEEE). By ensuring that this appliance is scrapped suitably, you can help prevent potentially damaging consequences for the environment and health.

The symbol on the appliance, or on the accompanying documentation, indicates that this product must not be treated as household waste, but must be delivered to the nearest collection centre for the recycling of electrical and electronic appliances. Disposal must be carried out in accordance with local environmental regulations for waste disposal.For further information on the treatment, recovery and recycling of this appliance, contact your competent local authority, the collection service for household waste or the shop where you purchased the appliance.

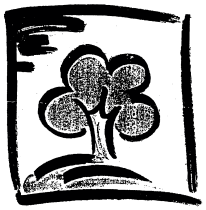

PRECAUTIONS AND GENERAL ADVICE

- **Before any cleaning or maintenance operation,disconnect the cooking hob from mains power supply.**
- **In case of prolonged use, additional ventilation may be needed (opening a window or increasing the extraction force of the hood).**
- **Keep children away from the cooking hob when it is in use.**
- **The appliance must not be used be people (including children) with limited physical,sensory or mental abilities, or without experience or expertise, unless they have received instructions for using it from those responsible for their safety.**
- **After use, ensure that the knobs are in position zero.**

Declaration of conformity CE

- This oven is designed to come into contact with food and complies with regulation (EC) no.1935/2004.
- This cooking hob (Class Y) has been designed to be used only for cooking. Any other use (such as heating a room) is improper and dangerous.
- This cooking hob has been designed, constructed and marketed in compliance with:
  - the safety requirements of "Low Voltage" Directive 2006/95/EC (replacing 73/23 EEC as amended);
  - protection requirements of EEC Directive "EMC" 89/336;
  - requirements of EEC Directive 93/68.

ENERGY SAVING TIPS

- The cooking hob is equipped with hotplates having different diameters. Use pots and pans whose bottom diameter is equal to that of the hotplates, or slightly larger.
- Only use flat-bottomed pots and pans.
- **Do not operate a hotplate without placing a container on it.**
- If possible, keep the container covered when cooking.
- Cook vegetables, potatoes, etc. with a small amount of water in order to cut down cooking time.
- A pressure cooker allows you to save even more energy and time.

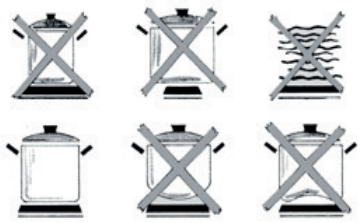

CARE AND MAINTENANCE

Cleaning the hob

- **Before cleaning the cooking hob, disconnect it from mains power supply and wait until it has cooled down.**
- Important: never clean the appliance with steam cleaning equipment.
- Wipe it with a cloth moistened with hot water and soap or diluted liquid detergent.
- Do not use abrasive or corrosive products, chlorine products or steel wool.
- Do not leave acid or alkaline substances, such as vinegar, salt or lemon juice, etc., on the cooking hob.

Stainless steel surface

- Clean it with a specific commercial product.

Note: if the cooking hob is used continuously,the high temperatures may alter the colour of the hotplates.

Cleaning the electric hotplates

The electric hotplates must be cleaned when they are lukewarm. Wipe them with a cloth moistened with water and salt, and polish with a cloth moistened with oil.

AFTER-SALES SERVICE

- **Before contacting After-sales Service:**

1. Re-start the cooking hob, to check whether correct operation has been restored.
2. If the malfunction persists, call the After-sales Service.

Give the following information:

- type of malfunction;
- model of cooking hob;
- service number (i.e., the number that follows the word SERVICE on the rating plate under the cooking hob and on the guarantee paper);
- your complete address;
- your telephone number and area code.

If any repairs are required, please contact **an authorised After-sales Service** as indicated in the warranty. In the unlikely event that an operation or repair is carried out by an **unauthorised technician**, always request a certification of the job carried out and insist on the use **of original spare parts. Failure to comply with these instructions may compromise the safety and quality of the product.**

SERVICE 0000 000 00000

INSTALLATION

Technical information for installer

This cooking hob can be embedded in a worktop 20 to 50 mm thick.
If another appliance is not fitted under the cooking hob, insert a separator panel, at a distance of at least 90 mm from the cooking hob bottom.

- **If a vertical piece of furniture is installed, there must be a gap of at least 100 mm between it and the edge of the cooking hob.**

Installation of cooking hob

- **Apply the supplied gasket to the cooking hob (unless it has already been fitted), after having cleaned its surface as shown in the figure.**

A - If the worktop is made out of wood, use the springs supplied.

1. Fit the 4 springs **A** into the relevant seat under the box.
2. Make an opening in the worktop, respecting the dimensions indicated in the enclosed product description sheet.
3. Install the cooking hob in the worktop.

B- If the worktop is made out of marble or other materials (plastics, ceramics or stone), the cooking hob must be fixed by means of brackets **B** to be ordered from the After-sales Service (code 4819 310 18528).

1. Align the brackets with the bores and fix them with the screws.
2. Make an opening in the worktop, respecting the dimensions indicated in the product description sheet.
3. Install the cooking hob in the worktop.

- Before installing the cooking hob, remove the plastic film that protects it, if present. The outer surfaces of the furniture or appliances adjoining the cooking hob must be heat resistant (heat protection "**Y**", according to standards EN 60335-2-6).
- Installation must comply with current local safety regulations.

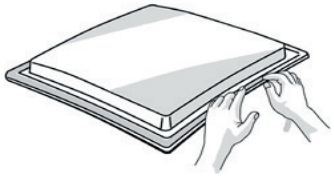

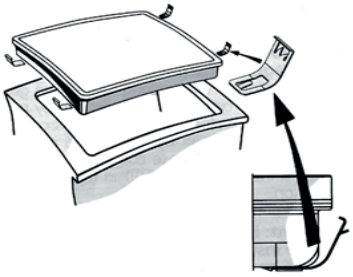

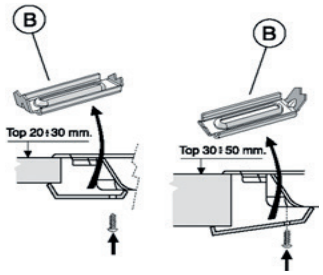

INSTALLATION

Electrical Connection

- **The electrical connections must comply with local regulations.**
- **The data relevant to the voltage and power absorption are indicated on the rating plate.**
- **The earthing of this appliance is compulsory by law. The manufacturer cannot be held responsible for injury to persons or animals or damage to property arising from failure to comply with these requirements.**
- **When the appliance is installed, provide a multi-pole circuit breaker with a contact separation (at least 3 mm) in all poles that provide full disconnection under overvoltage category III and must be incorporated in the fixed wiring in accordance with the national wiring rules.**
- **After installation, the electric parts must not be accessible.**
- **For electrical connection, use an H05RR-F cable (see table in product description sheet).**
- **The power cable must be long enough for connecting the appliance, once fitted in its housing, to the power supply.**
- **The electrical components must not be accessible to the user after installation.**

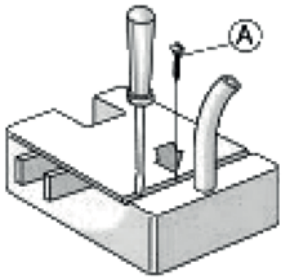

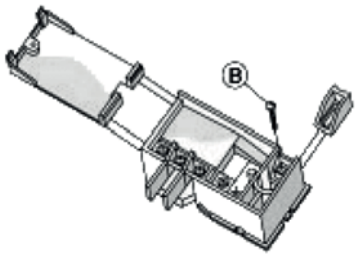

ELECTRICAL COOKING HOBS WITH SIDE CONTROLS

Connection to terminal board

1. Open the cover of the terminal board and loosen screw **A** by means of a tool, as shown in the figure.
2. Unsheathe the cable for about 70 mm.
3. Peel off the internal cables for about 10 mm loosen cable clamp screw **B**, and insert the cable in the cable clamp.
   - **The terminal board has 4 terminals:**

   1-2 interconnected (line)
   3 (neutral)
   4 (earth): marked with symbol ⏚
4. **Connect the cable to the terminal board, following the indications of the connection diagram punched on the bottom of the cooking hob. Fasten the cable clamp and close the cover.**

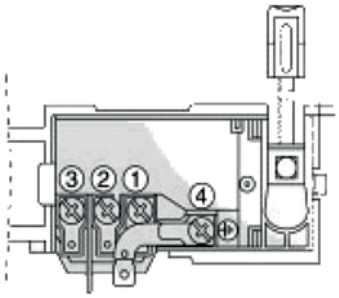

PRODUCT DESCRIPTION SHEET

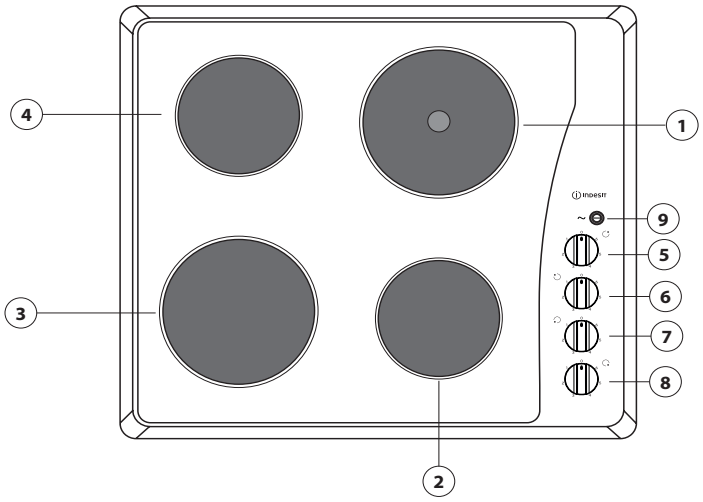

1. Rapid hotplate Ø 180 - 2000 W
2. Normal hotplate Ø 145 - 1000 W
3. Normal hotplate Ø 180 - 1500 W
4. Normal hotplate Ø 145 - 1000 W
5. Rapid hotplate control knob Ø 180
6. Normal hotplate control knob Ø 145
7. Normal hotplate control knob Ø 180
8. Normal hotplate control knob Ø 145
9. Hotplate operation control lamp

Operation of electric hotplates
- Set the knob to one of positions 1-6, which correspond to different temperatures.
- To switch off the hotplate, set the knob to position “0”.

DIMENSIONS OF COOKTOP AND WORKTOP (mm)

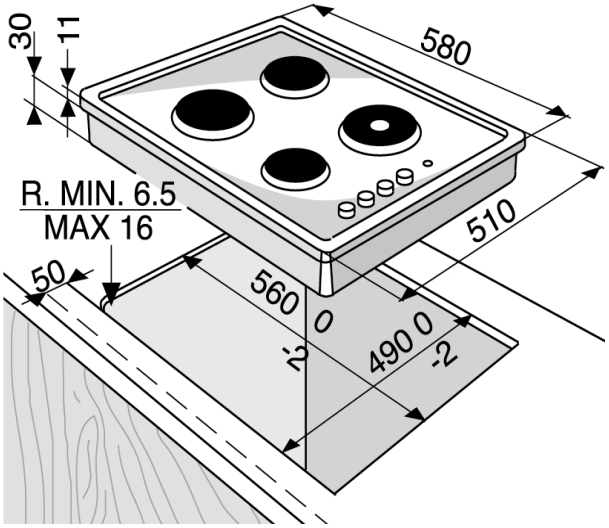

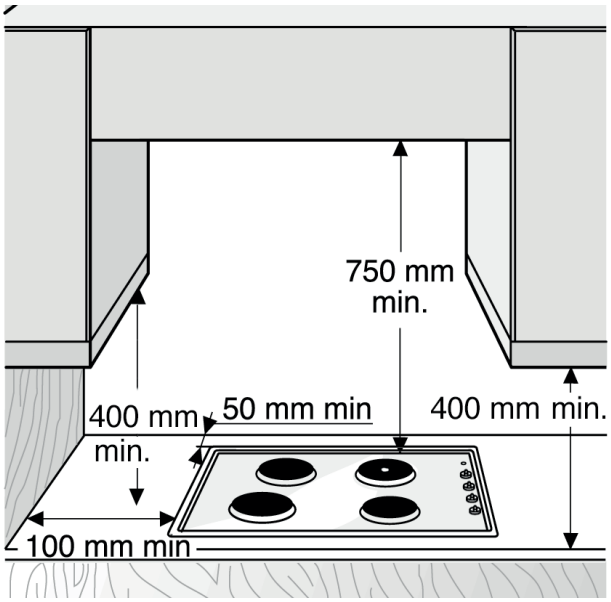

N.B.: In case of installation of a hood above the cooktop, please refer to the hood instructions for the correct distance.

SUPPLY VOLTAGE	CONDUCTORS: NUMBER AND SIZE	ELECTRICAL CONNECTION
230V ~ + ⏚	3 x 2,5 mm²	1 2 3 ⏚ L N

TYPE: PLETP 230V ~ 50Hz 5,5 kW

GB

400011161543

07/17