THANK YOU FOR PURCHASING A HOTPOINT PRODUCT.

To receive more comprehensive assistance, register the appliance on
www.hotpoint.eu/register

Before using the appliance carefully read the Health and Safety guide.

Before using the machine, it is imperative that the transport bolts are removed. For more detailed instructions on how to remove them, see the Installation Guide.

CONTROL PANEL

1. STEAM HYGIENE button
2. RAPID / KEY LOCK button
3. ON/OFF button
4. START/PAUSE button
5. FINAL CARE button
6. START DELAY button
7. SPIN button
8. TEMPERATURE button
9. WASH CYCLE SELECTOR KNOB

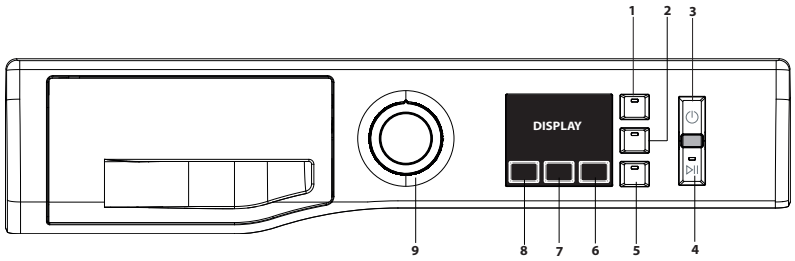

WASH CYCLE TABLE

Maximum load 9 kg Power input in off mode 0.5 W / in left-on mode 8 W							Add Garments	Detergents and Additives			Recommended detergent		Residual dampness %	Energy consumption kWh	Total water l
Wash cycle		Temperature		Max. spin speed (rpm)	Max. load (kg)	Duration (minutes)		Pre-wash	Wash	Fabric softener	Powder	Liquid			
		Default	Range					1	2	3					
1	**Mixed**	40°C	❄ - 40°C	1400	9	115	●	–	●	○	–	✔	–	–	–
2	**Eco Cotton (1)**	60°C	60°C	1400	9	250	●	–	●	○	✔	✔	53	1,03	57,5
			40°C	1400	9	235	●	–	●	○	✔	✔	53	1,24	94
3	**Cotton (2)**	40°C	❄ - 60°C	1400	9	235	●	–	●	○	✔	✔	53	1,24	94
4	**Synthetics (3)**	40°C	❄ - 60°C	1200	4,5	175	●	–	●	○	✔	✔	53	0,54	68
5	**Delicates**	40°C	❄ - 40°C	1000	4,5	95	●	–	●	○	–	✔	–	–	–
6	**Wool**	40°C	❄ - 40°C	800	2	85	●	–	●	○	–	✔	–	–	–
7	**Anti Allergy**	60°C	❄ - 60°C	1400	5	190	●	–	●	○	✔	✔	–	–	–
8	**Anti Stain 40°**	40°C	❄ - 40°C	1000	4,5	60	●	–	●	○	–	✔	–	–	–
9	**White**	40°C	❄ - 90°C	1400	9	120	●	●(90°)	●	○	✔	✔	–	–	–
10	**Steam Refresh**	–	–	–	2	20	–	–	–	–	–	–	–	–	–
11	**Rapid 30 min**	30°C	❄ - 30°C	800	4,5	30	●	–	●	○	–	✔	–	–	–
12	**Bed & Bath**	60°C	❄ - 60°C	1400	9	140	●	–	●	○	✔	✔	–	–	–
13	**Shirts**	40°C	❄ - 40°C	600	2	80	●	–	●	○	–	✔	–	–	–
14	**Spin & Drain ***	–	–	1400	9	10	–	–	–	–	–	–	–	–	–
15	**Rinse & Spin**	–	–	1400	9	55	–	–	–	○	–	–	–	–	–

● Required dosage ○ Optional dosage

The cycle duration indicated on the display or instruction manual is an estimate based on standard conditions. The actual duration may vary in relation to several factors, such as the temperature and pressure of the incoming water, ambient temperature, amount of detergent, load quantity and type, load balancing and any additional options selected.

1) Test wash cycle in compliance with regulation 1061/2010:
This cycle is designed for normally soiled cotton loads and is the most efficient in terms of both electricity and water consumption; it should be used for garments washable at 60°C or at 40°C. The actual washing temperature may differ from the indicated value.

For all testing institutes:
2) Long cotton cycle: set wash cycle 3 with a temperature of 40°C.
3) Long synthetics cycle: set wash cycle 4 with a temperature of 40°C.

* By selecting the **14** cycle and excluding the spin cycle, the washing machine will drain only.

PRODUCT DESCRIPTION

1. Top
2. Detergent dispenser drawer
3. Control panel
4. Handle
5. Porthole door
6. Drain pump (behind the plinth)
7. Plinth (removable)
8. Adjustable feet (2)

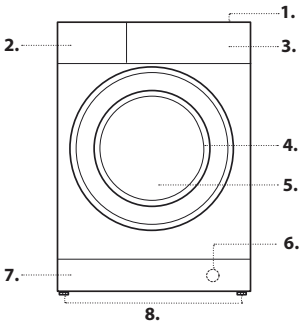

DETERGENT DISPENSER DRAWER

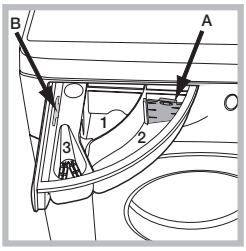

compartment 1: Pre-wash detergent (powder)
compartment 2: Detergent for the wash cycle (powder or liquid)
If liquid detergent is used, it is recommended that the removable plastic partition A (supplied) be used for proper dosage.
If powder detergent is used, place the partition into slot B.
compartment 3: Additives (fabric softeners, etc.)
The fabric softener should not overflow the grid.
! Use powder detergent for white cotton garments, for pre-washing, and for washing at temperatures over 60°C.
! Follow the instructions given on the detergent packaging.

WASH CYCLES

Follow the instructions on the symbols of the garment's wash care label. The value indicated in the symbol is the maximum recommended temperature for washing the garment.

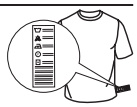

Mixed
For washing lightly to normally soiled resilient garments in cotton, linen, synthetic fibres and mixed fibres.
Eco Cotton 60°/40°
Suitable for washing moderately soiled cotton garments. At 40°C and 60°C it is the standard cycle for washing cotton garments, and is the most efficient in terms of combined water and electricity consumption.
Cotton
Normally to heavily soiled and robust cottons .
Synthetics
Suitable for washing moderately soiled garments made of synthetic fibres (e.g. polyester, polyacrylic, viscose, etc.) or mixed synthetic-cotton fibres.
Delicates
For washing very delicate garments. It is advisable to turn the garments inside out before washing them. For best results, use liquid detergent on delicate garments.
Wool - Woolmark Apparel Care - Green:
The "Wool" wash cycle is approved by the Woolmark Company for washing wool garments classified as "hand-washable", provided that the wash complies with the instructions appearing on the garment's label and with those provided by the manufacturer of this washing machine. (M1127)

In UK, Eire, Hong Kong and India the Woolmark trade mark is a Certification trade mark.
Anti Allergy
Suitable for removing major allergens such as pollen, mites and cat or dog hair.
Anti Stain 40°
The programme is suitable to heavily-soiled garments with resistant colours. It ensures a washing class that is higher than the standard class (A class). When running the programme, do not mix garments of different colours. We recommend the use of powder detergent. Pre-treatment with special additives is recommended if there are obstinate stains.
White
For washing normally to heavily soiled towels, underwear, table and bed linen, etc in resilient cotton and linen. Only when the temperature is selected at 90°C the cycle is provided with a prewash phase before main washing phase. In this case it is recommended to add detergent both, in the prewash and main wash section.
Steam Refresh
The garments will be damp once the cycle is completed, so we recommend hanging them to dry (2 kg, roughly 3 items).
This programme refreshes garments by removing bad odours and relaxing the fibres. Insert dry items only (that are not dirty) and select programme "**Steam Refresh**". Garments will be a little damp at the end of the cycle and can be worn after a few minutes. The "**Steam Refresh**" programme makes ironing easier.
! Do not add softeners or detergents.
! Not recommended for wool or silk garments.
Rapid 30 min
For washing lightly soiled garments quickly. This cycle lasts only 30 minutes, saving time and energy.
Bed & Bath
For washing home linen in a single cycle. It optimises the use of fabric softener and allows for saving time and electricity. We recommend the use of powder detergent.
Shirts
Use the special wash cycle to wash shirts in different fabrics and colours to guarantee they receive the best possible care.
Spin & Drain
Spins the load then empties the water. For resilient garments. If you exclude the spin cycle, the machine will drain only
Rinse & Spin
Rinses and then spins. For resilient garments.

WASH CYCLE PHASE INDICATOR LIGHTS

Once the desired wash cycle has been selected and has begun, the indicator lights switch on one-by-one to indicate which phase of the cycle is currently in progress.

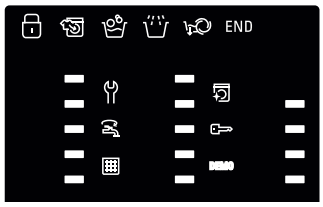

Wash
Rinse
Spin & Drain
END End of Wash Cycle

DISPLAY INDICATORS
Failure: Call Service
Refer to Troubleshooting section
Failure: Water filter clogged
Water cannot be drained; water filter might be blocked
Failure: No water
No or not sufficient inlet water.
In the event of any failure, refer to the "Troubleshooting" section.

CHILD LOCK

to activate the control panel lock, press and hold the button for approximately 3 seconds. The lit symbol signals that the control panel is locked. This prevents wash cycles from being modified accidentally (except for the ON/OFF button), especially if there are children in the home. To deactivate the control panel lock, press and hold the button for approximately 3 seconds.
Locked door indicator
When lit, the symbol indicates that the door is locked. To prevent any damage, wait until the symbol turns off before opening the door.
To open the door while a cycle is in progress, press the START/PAUSE button; if the symbol is off, the door can be opened.

FIRST-TIME USE

Once the appliance has been installed, and before you use it for the first time, run a wash cycle with detergent and no laundry, using the wash cycle **9 (60°)**.

DAILY USE

Prepare the laundry by following the suggestions appearing under the "TIPS AND SUGGESTIONS" section.
- Press the ON/OFF button .
- Open the door. Load the laundry while making sure not to exceed the maximum load quantity indicated in the wash cycle table.
- Pull out the detergent dispenser drawer and pour the detergent into the relevant compartments, as described in the "DETERGENT DISPENSER DRAWER" section.
- Close the door.
- Modify the temperature and/or spin.
- Select the desired wash cycle.
- Select the desired options.
- Press the START/PAUSE button to start the wash cycle; the relative indicator light will light up steady and the door will lock (symbol on).

PAUSING A CYCLE

To pause the wash cycle, press the START/PAUSE button again; the indicator light will flash. To start the wash cycle from the point at which it was interrupted, press the START/PAUSE button again.

OPENING THE DOOR, IF NECESSARY

Once a cycle starts, the symbol turns on to signal that the door cannot be opened. While a wash cycle is running, the door remains locked. To open the door while a cycle is under way, for example, to add or remove garments, press the START/PAUSE button to pause the cycle; the indicator light will flash. If the symbol is not lit, the door may be opened. Press the START/PAUSE button again to continue the cycle.

ADDING GARMENTS

An icon on the display will signal when additional garments can be introduced into the washing machine, without decreasing the washing performance. To add garments, first stop the washing machine by pressing the START/PAUSE button then open the door and insert them.
Press the START/PAUSE button again to restart the wash cycle from the point at which it was interrupted.

CHANGING A RUNNING WASH CYCLE

To change a wash cycle while it is in progress, pause the washing machine using the START/PAUSE button (the relative indicator light will flash), then select the desired cycle and press the START/PAUSE button again.
! To cancel a cycle that has already begun, press and hold the ON/OFF button. The cycle will be stopped and the machine will switch off.

AT THE END OF THE WASH CYCLE

Once the cycle terminates the **END** indicator light will light up; when the indicator light switches off, the door may be opened. Open the door, unload the laundry and switch off the machine. If you do not press ON/OFF button, the washing machine will switch off automatically after about 15 minutes.

OPTIONS

- If the selected option is not compatible with the set wash cycle, the indicator light will flash accompanied by a buzzer and the option will not be activated.
- If the selected option is not compatible with another previously selected option, the indicator light will flash accompanied by a buzzer and the option will not be activated.

Steam Hygiene
This option enhances washing performance by generating steam during the wash cycle to remove any bacteria from the fibres, which are treated at the same time. Place the laundry in the drum, choose a compatible programme and select option Steam Hygiene.
! The steam generated during the operation of the washing machine may cause the porthole door to become hazy.

Rapid
Rapid: selecting this option allows for reducing the wash cycle duration depending on the selected cycle, thus guaranteeing both water and energy saving. Use this cycle for lightly soiled garments.

Final Care
The washing machine will perform gentle tumbling through slow rotations of the drum. Final Care option starts after the cycle ends for a maximum duration of 6h and you can interrupt at any time by pressing any button on control panel or turning the knob.

Delay start
To set a delayed start for the selected cycle, press the corresponding button repeatedly until the desired delay period has been reached (1h-3h-6h-9h). When the button is pressed for the fifth time, the option will deactivate.
Once the START/PAUSE button has been pressed, the delay time can only be modified by decreasing it until the set cycle is launched.

Temperature
Each wash cycle has a pre-defined temperature. To modify the temperature, press the button.

Spin
Each wash cycle has a pre-defined spin speed. To modify the spin speed, press the button.

DESCALE AND CLEAN PROCEDURE

An icon on the display will regularly (roughly every 50 cycles) remind users that is time to run a maintenance cycle to clean the washing machine and combat limescale build-up and bad odours.
To delete the descale alert turn the knob or push any button (including ON/OFF button).
For optimal maintenance we suggest using WPRO Limescale and grease remover, according to the instructions shown on the package. The product can be purchased by contacting the technical assistance service or through the website www.whirlpool.eu.
Whirlpool declines all liability for any damages to the appliance caused by the use of other cleaning products for washing machines available on the market.

TIPS AND SUGGESTIONS

Divide the laundry according to:
Type of fabric (cotton, mixed fibres, synthetics, wool, garments to be hand-washed). Colour (separate coloured garments from whites, wash new coloured garments separately). Delicates (small garments – such as nylon stockings – and items with hooks – such as bras: insert them in a fabric bag).

Empty the pockets:
Objects such as coins or lighters can damage the washing machine and the drum. Check all buttons.

CARE AND MAINTENANCE

Before performing cleaning and maintenance, switch the washing machine off and disconnect it from the mains power. Do not use flammable liquids to clean the washing machine.

Cutting off the water and electricity supplies
Close the water tap after every wash. This will limit wear on the hydraulic system inside the washing machine and help to prevent leaks.
Unplug the washing machine when cleaning it and during all maintenance work.

Cleaning the washing machine
The outer parts and rubber components of the appliance can be cleaned using a soft cloth soaked in lukewarm soapy water. Do not use solvents or abrasives.

Cleaning the detergent dispenser drawer
Remove the dispenser drawer by lifting and pulling it outwards. Wash it under running water; this procedure should be effected regularly.

Caring for the door and drum
Always leave the porthole door ajar in order to prevent unpleasant odours from forming.

Cleaning the pump
The washing machine is fitted with a self-cleaning pump that does not require any maintenance. Small items (such as coins or buttons) may sometimes fall into the protective pre-chamber situated at the base of the pump.
! Make sure that the wash cycle has ended and unplug the appliance.
To access the pre-chamber:
1. remove the covering panel on the front side of the machine by inserting a screwdriver in the centre and sides of the panel and using it as a lever;
2. place a low and wide container under the water filter in order to collect the residual water.
3. loosen the drainage pump cover by turning it anti-clockwise: it is normal for some water to leak out;
4. clean the inside thoroughly;
5. screw the cover back on;
6. put the panel back in place, making sure the hooks slot in place before pushing the panel onto the appliance.

Checking the water inlet hose
Check the water inlet hose at least once a year. If it is cracked or broken, it must be replaced: during wash cycles, the high pressure of the water could suddenly split the hose open.
! Never use hoses that have already been used.

ANTIMICROBIAL SEAL

The seal around the porthole door is made from a special mixture ensuring antimicrobial protection, thus reducing bacterial proliferation up to 99.99%.
The seal contains zinc pyrithione, a biocidal substance which reduces the proliferation of harmful microbes (*) such as batteries and mould prone to causing stains, unpleasant odours and product deterioration.
(*) According to tests performed by the University of Perugia, Italy on: Staphylococcus aureus, Escherichia coll, Pseudomonas aeruginosa, Candida albicans, Aspergillus niger, Penicillium digitatum
In rare cases an allergic reaction may be caused by prolonged contact between seal and skin.

ACCESSORIES

Contact our Technical Assistance Service to check whether the following accessories are available for this washing machine model.

Stacking kit
With this accessory you can secure the tumble dryer to the upper part of your washing machine to save space and facilitate loading and unloading of the tumble dryer.

TRANSPORT AND HANDLING

Do not lift the washing machine by gripping it from the upper section.
Unplug the appliance and close the water tap. Check that the door and detergent dispenser drawer are tightly closed. Detach the filling hose from the water tap then detach the drain hose. Empty all the water remaining in the hoses and secure the latter so that they do not get damaged during transport. Apply the transport bolts back on. Repeat, in reverse order, the transport bolt removal procedure described in the "Installation instructions".

TROUBLESHOOTING

Your washing machine could occasionally fail to work. Before contacting the Technical Assistance Service, make sure that the problem cannot be easily solved using the following list.

Anomalies	Possible causes / Solution
The washing machine does not start.	The appliance is not plugged into the socket fully, or not enough to make contact.
	There is no power in the house.
The wash cycle does not start.	The washing machine door is not closed properly.
	The ON/OFF ⏻ button has not been pressed.
	The START/PAUSE ▷II button has not been pressed.
	The water tap has not been opened.
	A delay has been set for the start time.
	The Demo Mode is active (see below how to deactivate).
The machine does not fill with water or the indicator light for the first wash cycle stage flashes rapidly.	The water inlet hose is not connected to the tap.
	The hose is bent.
	The water tap has not been opened.
	There is no water supply in the house.
	The pressure is too low.
	The START/PAUSE ▷II button has not been pressed.
The washing machine continuously loads and unloads water.	The drain hose is not fitted between 65 and 100 cm from the floor.
	The free end of the hose is immersed in water.
	The wall drainage system is not fitted with a breather pipe. If the problem persists even after these checks, turn off the water tap, switch the appliance off and contact the Technical Assistance Service. If the home is on one of the upper floors of a building, there may be problems relating to back-siphonage, causing the washing machine to fill with water and drain continuously. Special anti-siphon valves are available in shops and help to prevent this inconvenience.
The washing machine does not drain or spin. ▦	Clean the pump filter (see Care and maintenance chapter)
	The drain hose is bent.
	The drainage duct is clogged.
The washing machine vibrates a lot during the spin cycle.	Transport bolts have been not removed correctly during installation.
	The washing machine is not leveled.
	The washing machine is tucked between furniture cabinets and the wall.
The washing machine leaks.	The water inlet hose is not screwed on properly.
	The detergent dispenser drawer is obstructed.
	The drain hose is not properly attached.
The Service 🔧 blinks.	Switch off the machine and unplug it, wait for approximately 1 minute and then switch it back on again. If the problem persists, contact the Technical Assistance Service.
There is too much foam.	The detergent is not suitable for machine washing (it should display the text "for washing machines" or "hand and machine wash", or the like).
	Too much detergent was used.
"Spin&Drain" phase icon blinks, "0" spin speed displayed .	Unbalance of laundry load prevented spin cycle, to protect the washing machine. If you want to spin the wet laundry, add more laundry items of different sizes and start "Spin&Drain" programme. Avoid small laundry loads consisting of few big, absorbent pieces of laundry / wash different sizes of articles in one load.

Disable the DEMO MODE : The following actions must be carried out in sequence, without breaks. Switch the machine ON and then switch it OFF again. Press the START/PAUSE ▷II button until the buzzer is heard. Switch the machine on again. The "DEMO" indicator flashes and then turns OFF.

You can download the SAFETY AND INSTALLATION INSTRUCTIONS, OPERATING MANUAL, TECHNICAL SHEET and ENERGY DATA by:
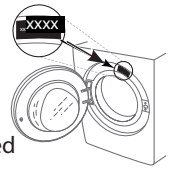
- Visiting the website **http://docs.hotpoint.eu.**
- Using the QR code.
- Alternatively, **contact our Technical Assistance Service** (the telephone number is indicated in the warranty booklet). When contacting the Technical Assistance Service, provide the codes shown on the adhesive label applied to the inside of the door.